इंटरनेट मानक

Disclosure to Promote the Right To Information

Whereas the Parliament of India has set out to provide a practical regime of right to information for citizens to secure access to information under the control of public authorities, in order to promote transparency and accountability in the working of every public authority, and whereas the attached publication of the Bureau of Indian Standards is of particular interest to the public, particularly disadvantaged communities and those engaged in the pursuit of education and knowledge, the attached public safety standard is made available to promote the timely dissemination of this information in an accurate manner to the public.

"जानने का अधिकार, जीने का अधिकार"
Mazdoor Kisan Shakti Sangathan
"The Right to Information, The Right to Live"

"पुराने को छोड नये के तरफ"
Jawaharlal Nehru
"Step Out From the Old to the New"

IS 12841-3 (1989): Surgical Instruments - Needle Holders, Part 3: Heaney's Pattern [MHD 1: Surgical Instruments]

"ज्ञान से एक नये भारत का निर्माण"
Satyanarayan Gangaram Pitroda
"Invent a New India Using Knowledge"

Act Number 22 of 2005
The Indian Parliament
RIGHT TO INFORMATION

Made Available By
Public.Resource.Org

"ज्ञान एक ऐसा खजाना है जो कभी चुराया नहीं जा सकता है"
Bhartṛhari—Nītiśatakam
"Knowledge is such a treasure which cannot be stolen"

BLANK PAGE

BRUTUM FULMEN

IGNORANTIA JURIS NON EXCUSAT

PROTECTED BY COPYRIGHT

IS 12841 (Part 3) : 1989
(Reaffirmed 2006)

Indian Standard

SURGICAL INSTRUMENTS — NEEDLE HOLDERS — SPECIFICATION

PART 3 HEANEY'S PATTERN

भारतीय मानक

शल्य चिकित्सा यंत्र — सुई होल्डर — विशिष्टि

भाग 3 हेनि के नमूने वाला

UDC 615·472·4

© BIS 1990

BUREAU OF INDIAN STANDARDS
MANAK BHAVAN, 9 BAHADUR SHAH ZAFAR MARG
NEW DELHI 110002

July 1990 **Price Group 2**

FOREWORD

This Indian Standard (Part 3) was adopted by the Bureau of Indian Standards on 20 September 1989, after the draft finalized by the Surgical Instruments Sectional Committee had been approved by the Medical Instruments and Hospital Planning Division Council.

This standard is being published in 4 parts. Other parts are as follows:

Part 1 Needle holders, Mathieu's pattern

Part 2 Needle holders with carbide inserts, Stratte's pattern

Part 4 Needle holders with carbide inserts, Debakey's pattern

In the preparation of this standard, assistance has been derived from DIN 13460 'Needle holders, Part 3: Heaney's pattern', issued by the Deutsches Institut für Normung (Germany).

For the purpose of deciding whether a particular requirement of this standard is complied with, the final value, observed or calculated, expressing the result of a test or analysis, shall be rounded off in accordance with IS 2 : 1960 'Rules for rounding off numerical values (*revised*)'. The number of significant places retained in the rounded off value should be the same as that of the specified value in this standard.

Indian Standard

SURGICAL INSTRUMENTS — NEEDLE HOLDERS — SPECIFICATION

PART 3 HEANEY'S PATTERN

1 SCOPE

1.1 This standard (Part 3) specifies shape, dimensions and other requirements of Heaney's pattern needle holder with or without carbide inserts used in general surgery.

2 REFERENCES

2.1 The following Indian Standards are necessary adjuncts to this standard:

IS No.	*Title*
3642 (Part 1) : 1989	Surgical instruments — General requirements and test methods: Part 1 Non-cutting articulated instruments (*second revision*) (*under preparation*)
4905 : 1968	Methods for random sampling
6603 : 1972	Stainless steel bars and flats

3 MATERIAL

3.1 The needle holder shall be made of stainless steel conforming to designation 20Cr13, 30Cr13, or 40Cr13 of IS 6603 : 1972.

4 SHAPE AND DIMENSIONS

4.1 The shape and dimensions of the needle holder shall be as shown in Fig. 1.

5 OTHER REQUIREMENTS

5.1 The needle holders shall conform to the relevant provisions of **4** to **17** of IS 3642 (Part 1) : 1989 for all other requirements.

6 SAMPLING

6.1 The scale of sampling and criteria for conformity of the instruments to the requirement of this specification shall be as agreed to between the purchaser and the supplier. A recomended sampling plan is given in Annex A.

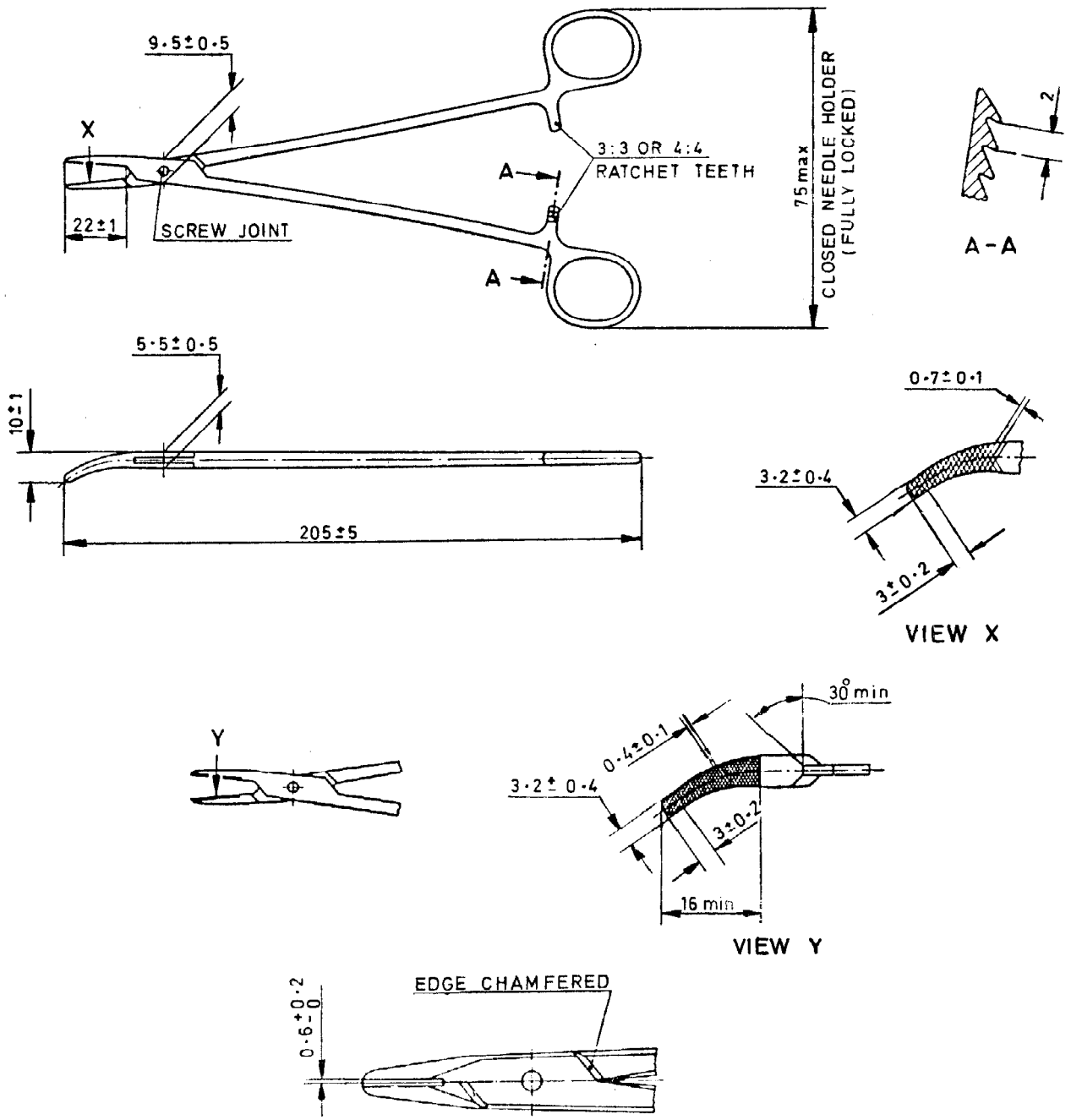

JAW PORTION AND JOINT

All dimensions in millimetres.

FIG. 1 NEEDLE HOLDER, HEANEY'S PATTERN

ANNEX A

(*Clause* 6.1)

SAMPLING PLAN AND CRITERIA FOR CONFORMITY FOR NEEDLE HOLDERS, HEANEY'S PATTERN

A-1 LOT

A-1.1 In a consignment, all the needle holders of the same pattern and dimensions shall be grouped together to constitute a lot, not exceeding 50. Each lot shall be tested for the requirements of specification.

A-2 SCALE OF SAMPLING AND CRITERIA FOR CONFORMITY

A-2.1 A sample of eight needle holders from the lot shall be selected at random and in order to ensure randomness of selection, procedures given in IS 4905 : 1968 may be followed. The needle holders so selected shall be tested for the requirements of shape and dimensions, material and other requirements (except hardness, elasticity and corrosion resistance) according to IS 3642 (Part 1) : 1989. Any needle holder failing to meet one or more of the above requirements shall be termed defective. The lot shall be considered as conforming to these requirements, if no defective is found in the sample.

A-2.2 The lot which has been found satisfactory according to **A-2.1** shall be tested for the requirements of hardness, elasticity and corrosion resistance. For this purpose a sub-sample of three needle holders shall be taken out of the sample drawn at **A-2.1** and tested for each of the above requirements. The lot shall be considered as conforming to the above requirements of the specification, if none of the needle holders in the sub-sample fails in any of these tests.

Standard Mark

The use of the Standard Mark is governed by the provisions of the *Bureau of Indian Standards Act, 1986* and the Rules and Regulations made thereunder. The Standard Mark on products covered by an Indian Standard conveys the assurance that they have been produced to comply with the requirements of that standard under a well defined system of inspection, testing and quality control which is devised and supervised by BIS and operated by the producer. Standard marked products are also continuously checked by BIS for conformity to that standard as a further safeguard. Details of conditions under which a licence for the use of the Standard Mark may be granted to manufacturers or producers may be obtained from the Bureau of Indian Standards.

Bureau of Indian Standards

BIS is a statutory institution established under the *Bureau of Indian Standards Act, 1986* to promote harmonious development of the activities of standardization, marking and quality certification of goods and attending to connected matters in the country.

Copyright

BIS has the copyright of all its publications. No part of these publications may be reproduced in any form without the prior permission in writing of BIS. This does not preclude the free use, in the course of implementing the standard, of necessary details, such as symbols and sizes, type or grade designations. Enquiries relating to copyright be addressed to the Director (Publications), BIS.

Revision of Indian Standards

Indian Standards are reviewed periodically and revised, when necessary and amendments, if any, are issued from time to time. Users of Indian Standards should ascertain that they are in possession of the latest amendments or edition. Comments on this Indian Standard may be sent to BIS giving the following reference:

Doc : No. MHD 1 (2077)

Amendments Issued Since Publication

Amend No.	Date of Issue	Text Affected

BUREAU OF INDIAN STANDARDS

Headquarters:

Manak Bhavan, 9 Bahadur Shah Zafar Marg, New Delhi 110002
Telephones : 331 01 31, 331 13 75

Telegrams : Manaksanstha
(Common to all Offices)

Regional Offices:

Central : Manak Bhavan, 9 Bahadur Shah Zafar Marg NEW DELHI 110002	331 01 31 331 13 75
Eastern : 1/14 C.I.T. Scheme VII M, V.I.P. Road, Maniktola CALCUTTA 700054	37 86 62
Northern : SCO 445-446, Sector 35-C, CHANDIGARH 160036	2 18 43
Southern : C.I.T. Campus, IV Cross Road, MADRAS 600113	41 29 16
Western : Manakalaya, E9 MIDC, Marol, Andheri (East) BOMBAY 400093	6 32 92 95

Branches : AHMADABAD. BANGALORE. BHOPAL. BHUBANESHWAR. COIMBATORE. FARIDABAD. GHAZIABAD. GUWAHATI. HYDERABAD. JAIPUR. KANPUR. PATNA. TRIVANDRUM.

Printed at Arcee Press, New Delhi, India